THE DRUM BRAKING SYSTEM
INSTRUCTION MANUAL

VERSION: A4

DATE: Mar.2024

Contents

1. Brake disassembly and installation 1

2. Connection and adjustment of the brake micro switch 2

3. Adjustment of braking system 3

4. Check and maintenance of brake lining 6

5. Instruction of brake release 6

6. Brake maintenance requirements 9

NOTICE!!! Before adjusting the braking system should confirm the car s position to prevent strong tip and crouch driver of bottom.

WARNING! When the machine has load, do not adjust the two brakes at the same time.

ATTENTION! When adjusting the braking system, be sure that the one brake has enough braking force, and then adjust the other side.

1. Brake disassembly and installation

1.1 WYT-S series brake disassembly

Loosen item 1 four screws in fig. 1.1,remove the item 2 cover, remove the item 3 brake power line and micro switch line from the terminal, and remove the item 4 four bolts, the brake can be removed from item 5 brake mounting bracket.

1.2 WYT-Y series brake disassembly

Loosen item 1 four screws in fig. 1.2,remove the item 2 cover, remove the item 3 brake power line and micro switch line from the terminal, and remove the item 4 four bolts, the brake and item 5 base can be removed from brake mounting bracket remove the item 6 ,the brake can be removed from item 5 base.

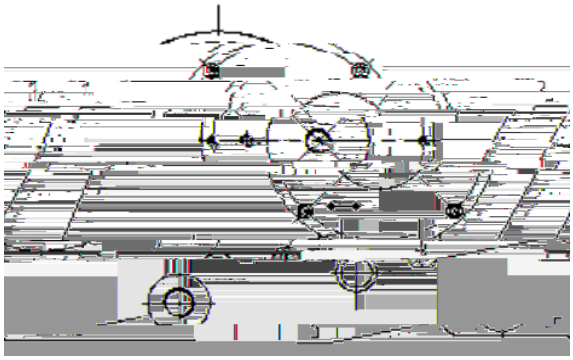

Fig. 1.1

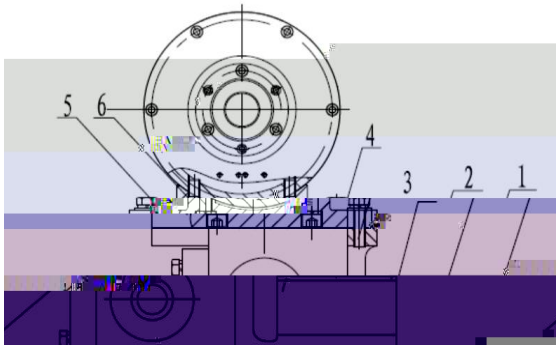

Fig. 1.2

14 Draw bar lock nut 15 Brake shoe 16 Lock nut 17 Puller bolt

Fig. 1.5 Configuration of braking system

Function of main part

3 Adjust nut Adjust its position can control the armature in the appropriate position and keep proper working stroke,and avoid impacting the armature and making noise;

8 Brake spring Adjust its compression may control the braking force, over compression will cannot take off the brake;

10 Compress nut Adjust its position can control braking force;

12 Ruler Reference mark of system extensive restoration braking force;

13 Draw bar Generate braking force,control the max clearance of take off the brake;

17 Puller bolt

As follow is the adjustment of the brake.

3.1 Adjustment of the stroke

Loosen lock nut (6) and rotates the Mandril bolt (7) anti-clockwise with the spanner along the thread, causes the Mandril bolt (7) to be separated from Mandrill (5). Then rotates it clockwise until contacts with Mandrill (5), and rotates 2.5 circles (pitch is 2mm) clockwise along the thread, push mandril and make the armature move 5mm inwared. Take on the brake, when the armature moves, the mandril bolt moves outward from the inside is 4mm. If the stroke is small, should rotate Mandril bolt (7) clockwise, Otherwise, should rotate Mandril bolt (7) counterclockwise. And observe whether there is the sound of armature compact with the cover. Armature not hit the cover as suitably and it is the best that the gap smallest. After adjusting, tighten Mandril bolt (7) with lock nut (6).

3.2 Adjustment of the match condition between brake shoe and brake pulley

Lock nut (3 and 4) can adjust the compression of reset spring (2) and low the noise when take off the brake. The adjustment principle is that there is little force when adjust nut (3) press on the top of spring. The adjustment method, the spring at the free state, rotate adjust nut (3) just contacts with the top of spring, and then rotate 1 circle clockwise , tighten adjust nut (3) with lock nut (4).

Adjust the puller bolt (17) under the brake pulley,when the brake spring generat enough force and make the arc surface of brake shoe press the brake arm firmly, and make puller bolt (17) against on the two sides surface of the brake shoe, but the force of bolt cannot over large. In principle, it is suitably that rotate puller bolt (17) 30 degrees when the puller bolt (17) just contacts with the surface of brake shoe. Finally, tighten puller bolt (17) with lock nut (16).

3.3 Adjustment of the clearance

Loosen draw bar lock nut (14), power on the brake, observe the clearing between the brake shoe and brake pulley, and guarantee the clearance between brake shoe and brake pulley is 0.15mm to 0.30mm, check it with feeler. In principle

it is suitably that there is no friction between the brake shoe and brake pulley, clearance smaller is better. Rotate the top of draw bar (13) clockwise along the thread when the clearance is large, otherwise, rotate counterclockwise. Tighten draw bar (13) with draw bar lock nut (14) when adjust suitable.

3.4 Adjustment of synchronism

Loosen compress nut (10) and lock nut (11), causes the spring to be at the free state ,rotate compress nut (10), causes spring washer (9) against on the free end surfaces of brake spring 8 , and take this position as adjustment reference point, and have enough braking force by adjust compress nut.

Observe the synchronism of two sides brake arm, when open the brake and one side slow another side is quick, if the braking force enough, reduce the pressure of the slowly side, otherwise, should increase the pressure of the quickly side. Observe while adjusting, until synchronization. When close the brake, one side quick another side is slow, slowly side should increase the pressure, and otherwise, quick side should reduce the pressure, until synchronization. Mark the position of the ruler when it is synchronism, and calculates the braking force; tighten compress nut (10) and lock nut (11) when the brake torque is ok. After the adjustment, inspect the interconnection locking relations part whether to lock, and carries on the braking force experiment and the elevator static load experiment. If the static load experiment is unqualified, should readjust.

4. Check and maintenance of brake lining

In normal use, the brake to zero speed brake, don't wear on brake lining. But the brake lining state need regular inspection, to prevent abnormal operation caused damage to the brake lining.

Before brake lining thickness measurements, we must take the elevator to the upper station (no load), and then cut off the power, otherwise it may occur the car accident. Confirm the brake power-off, the measuring ruler perpendicular to the arc surface of brake pulley, the distance between the arc surface of brake pulley and

brake shoes is the thickness of the brake lining. The brake lining must be replaced when its thickness less than 6mm, see fig. 1.6.

Fig. 1.6

5. Instruction of brake release

All mechanical and manual brake release device equipped with each earless traction machine produced by our company, used for elevator breakdown manually move the elevator.

Be sure to cut off the main power supply before using brake release device.

The braking system is an important safety component of traction machine of elevator. Brake release device can only operate in the elevator failures and outages rescue situations by professional,prohibited the use of non-emergency.

l brake release device should be used for emergency operation in case of elevator failure

Manual brake release device of gearless traction machine is divided into two kinds of situation, room and no room, details are as follows.

5.1 Machine room brake release device

For the case of the traction machine installed in the machine room, our company is equipped with release handle as shown in fig. 1.7-brake release lever assembly, please according to the method is shown to release the brake.

Method of manual release :

Step 1: Remove the release handle from the designated position in the machine room;

Step 2: Insert the release handle into the iron core rod between the top rod cap and the protective sleeve;

Step 3: The split magnetic actuator opens the brake by pressing the release handle inward (in the direction shown in Figure 1.8);

Step 4: After the operation is completed, the release handle must be removed and hung back to the designated position in the machine room.

Note:After manually releasing the brake, the release handle must be removed from the brake and hung on the wall for proper storage. When the elevator is operating normally, it is strictly prohibited to place the brake release handle on the brake.

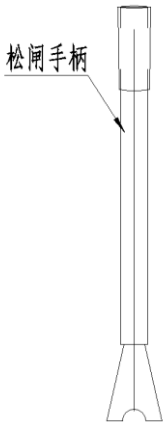

Fig. 1.7 Release handle

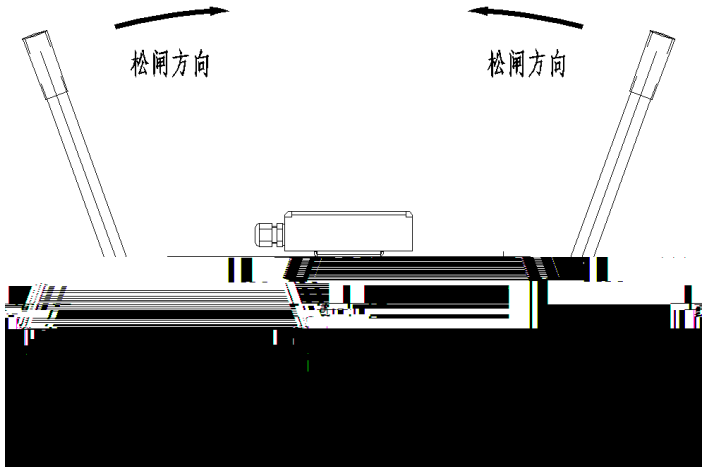

Fig. 1.8 Manual release

must be sealed to return to the normal operation of the elevator as shown in fig1.9.

6.5 Brake lining wear may cause brake failure, brake maintenance should checking brake lining for wear, replace if necessary.

6.6 Pay attention to check operation of brake switch, when the brake action is not normal, brake switch signal is given, the control system must protect, guarantee the elevator can't continue to run, timely maintenance the not normal brake.

6.7 The brake arm each rotation joint needs oil aperiodicity, guarantees its movement flexibility.

6.8 When the number of times the brake(spec. in brake nameplate be marked -WL or -WLS) is used exceeds 2 million times or every two years after leaving the factory, the shock absorber pad should be replaced.The shock absorber pad is specially customized and needs to be consulted by us.

The replacement method : Remove the screw to remove the cover(the roof is still on the shaft),replaced the shock absorber pad can be.(Fig. 2.1).After replacing the shock absorber pad, it is necessary to readjust the brake stroke and the brake belt clearance to ensure that the brake is reliably opened and closed.

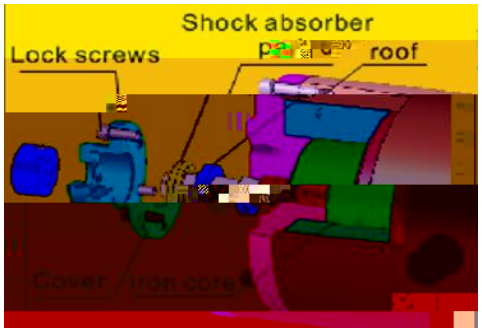

Fig. 2.1

NOTICE! The static load test method: add 150% rated load in the car, observe the braking wheel for ten minutes, there should have no skid between the braking wheel and the braking pad.

WARNING! If the braking force test is unqualified, then the elevator is forbidden to be electrified, otherwise it would occur accidents.